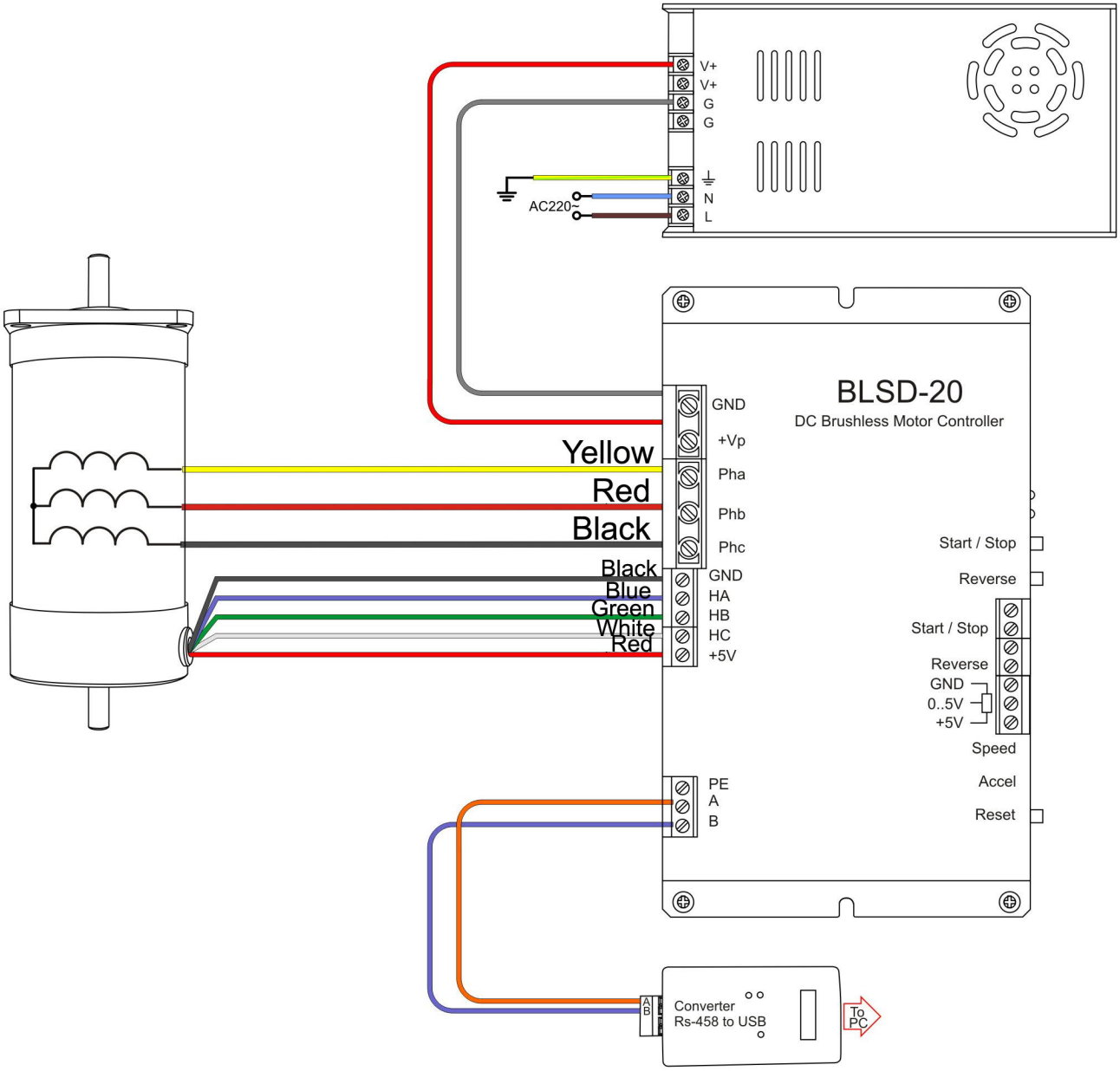BLSD-20 – connection scheme for BLDC motors SM42L and SM57L