SM5946W

BRUSH DC GEARMOTOR

We sell DC motors with gear heads. Brush DC motors are chip, easy to use and don't require any service.
DC motors are applied in industrial machinery, robotics, tools, toys, simulators, electro bikes, transporters and other machines.
SM5946W is a DC brush motor with a worm gearhead. The motor is reversible, maintenance-free. Gearmotor is self-impeding. Supply voltage 12 VDC is suitable for a wide range of applications. 24VDC power supply is upon a request. The standard reduction ratio is 1/30. Other ratios are on request.

Technical parameters

Motor power	60 W	Reduction ratio	1/30
Rated torque	30 kgf*cm	Gearhead type	worm
Rated speed	80 rpm	Voltage	12 VDC

Dimensions

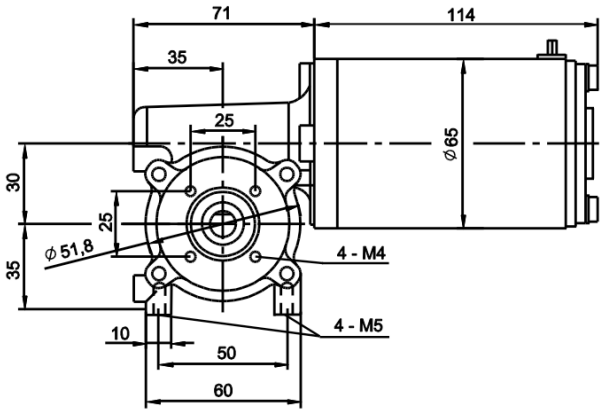

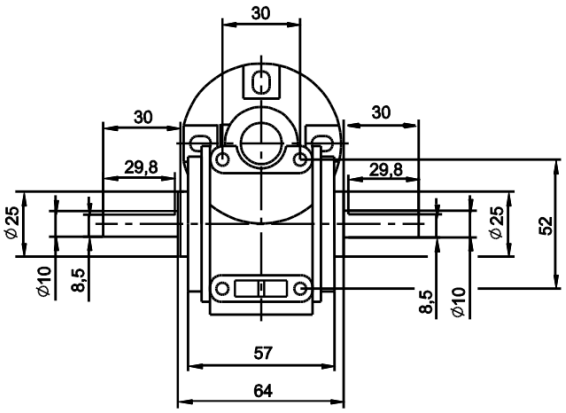

Address: Tallinn Science Park Tehnopol,
Akadeemia tee 21/6, 12618, Tallinn, Estonia
Phone: +372 6559914
E-mail: sale@smd.ee

SMART MOTOR DEVICES
DRIVERS AND CONTROLLERS FOR ELECTROMOTORS